AUTOMATED CARD BOX PRODUCTION LINE - PLC SIMULATION

Factory I/O + Siemens TIA Portal V20 + S7-PLCSIM

Project Description:

The project has been designed and programmed for simulates a simple production line that transports exactly *5 boxes* from a start point to an end point using a conveyor system. The simulation is built in ***Factory I/O*** and controlled by PLC logic programmed in ***TIA Portal V20*** using ***S7-PLCSIM*** for realistic testing.

The component :

- ✧ **Belt Conveyor:** Carries boxes from start to end point.
- ✧ **Retroreflective sensor**: Detects and counts boxes, triggers new box entry.
- ✧ **Start button:** Starts the conveyor and turns on green light.
- ✧ **Stop button:** Stops the process and turns on red light (warning light).
- ✧ **Counter**: Counts boxes using signal from retroreflective sensor (target: 5 boxes).
- ✧ **Timer**: Converts pulse signal from sensor to timing signal.

Main Goals / Learning Outcomes:

- ➢ Training on basic PLC components: Timer, Counter, Inputs/Outputs.
- ➢ Training on connecting Factory I/O (simulation) with TIA Portal (PLC program).
- ➢ Training on Ladder Diagram programming language.

Demo:

https://youtu.be/a9bOzDNn0EU?si=eqFI_Ek7LMBGUeWj

(Video shows: Start button → boxes moving → counting → stop after 5 boxes → Alarmlight)

Screenshots:

Factory io image

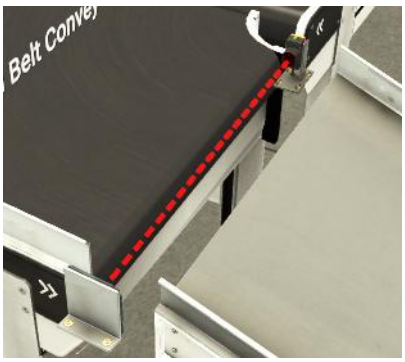
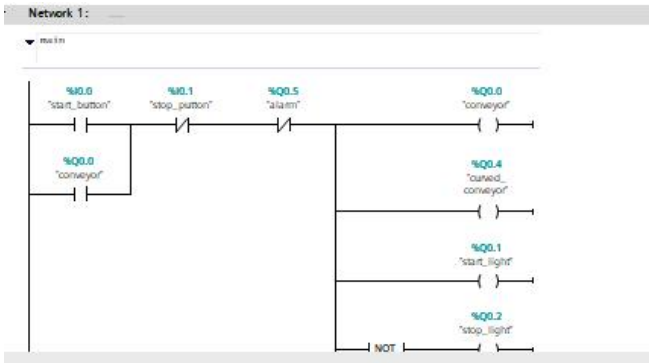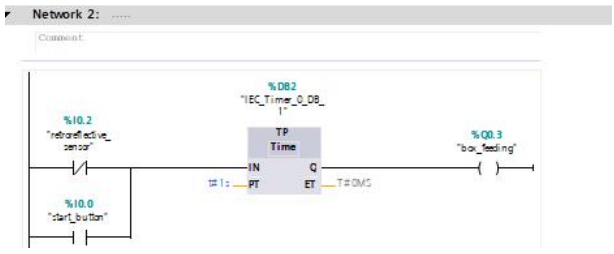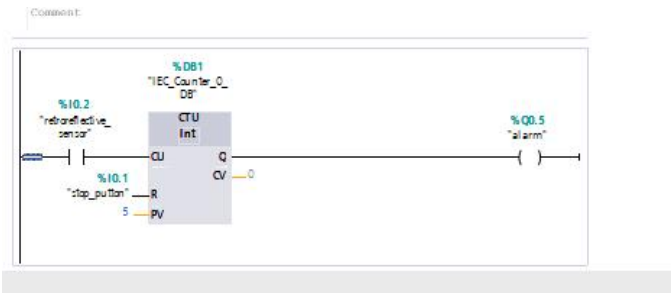
Tiva v20 image